BLACKJACK® LIGHTING

SMALL PENDANT - NOVO SHORT

Project:

Note:

Type: **Quantity:**

Model#: SP - NVS - ___ - 02 - ___ - ___ - 5W - ___ - ___

Description

The Novo Short pendant is a simple geometric cylindrical form. Executed in aluminum, this pendant uses an integrated LED light source, and a frosted optical light guide for even light distribution in all directions.

Specifications

- Color Rendering Index: 90CRI
- LED Color Temperature: 3000K (standard)
- Cable Length: 8' (see page 2 for detail), for longer lengths consult factory
- Lumens: 5W/400 Lumens
- Lamping: 5W
- For recommended dimmers see https://www.blackjacklighting.com/dimming-information

Features

- Available with screw-in reflector or optical acrylic light guide diffusers
- Suspends from an 8' adjustable cable
- Damp location rated

Options

- Color Temperature: 2700K, 3000K, 3500K, 4000K
- Standard Finishes: BL - Black, PC - Polished Chrome or WH - White
- Special Order Powder Coat Finishes: BZ - Bronze, SG - Satin Gold or SS - Satin Silver
- Light Guide: RR - Reflector Ring, LR - Luminous Ring, FR - Frosted or BU - Bubble
- Mounting: See page 2 for mounting options

Dimensions

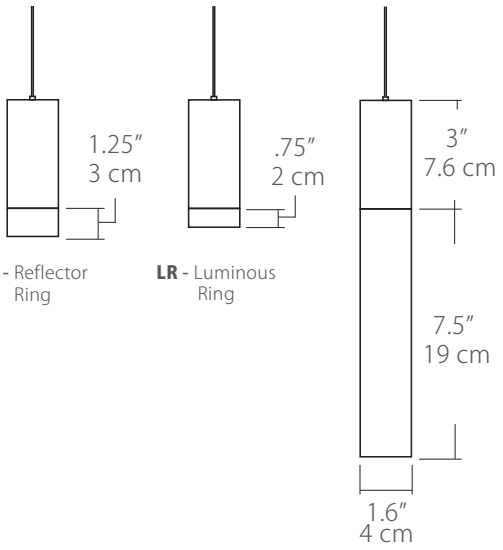

RR - Reflector Ring

LR - Luminous Ring

Diffusers

RR - Reflector Ring

LR - Luminous Ring

FR - Frosted

BU -Bubble

ORDERING GUIDE

Category		Series		Diffuser		Size		Finish		Color Temp.		Wattage		Mounting		Length
SP	–	NVS	–		–	02	–		–	30K	–	5W	–		–	
SP Small Pendant		**NVS** Novo Short		**LR** 1" Luminous Ring **RR** 3" Reflector Ring **FR** 7" Frosted **BU** 7" Bubble		**02** 2" Diameter		**Standard** **BL** Black **PC** Polished Chrome **WH** White **Special Order** **BZ** Bronze **SG** Satin Gold **SS** Satin Silver		**27K** 2700K **30K** 3000K **35K** 3500K **40K** 4000K (30K Standard)		**5W** 5Watts/ 400 Lm		**SP5** 5" Canopy **SP2** 2.5" Fascia Canopy **MPC** Multi-Port Connector **JTA** JackTrack Adapter (See page 2 for mounting information)		**BLANK** (Leave blank for standard 96" cable length) **###** for cable length longer than 96"specify cable length in inches

Example: SP-NVS-RR-02-BL-30K-5W-SP2-

We reserve the right to change, modify or upgrade our products without notice.
© 2022 Blackjack Lighting LLC

tel: **(847) 941-0588**
fax: **(847) 306-3432**
email: **sales@blackjacklighting.com**

Blackjacklighting.com
1547 Barclay Blvd.
Buffalo Grove IL, 60089

PENDANT OPTIONS

Finish

Finish

PC
BL
WH
BZ
SG
SS

PC - Polished Chrome | **BL** - Matte Black | **WH** - White

Standard Finishes

BZ - Bronze | **SG** - Satin Gold | **SS** - Satin Silver

Special Order Powder Coat Finishes

Wattage

Wattage

5W

5W = 5 Watts / 400 Lumens

(Lumens measured at 3000K)

Mounting

Mounting

SP5
SP2
MPC
JTA

SP5 = 5" canopy with integrated driver (included), attaches to rear of canopy and sits inside ceiling mounted junction box
Cable with modular connector attaches to canopy w/ integrated universal driver (120-277V / TRIAC, ELV, 0-10V dimming)

SP2 = 2.5" thin profile canopy that attaches flush to a rigid ceiling (driver sold separately)
Cable with modular connector (and optional wire harness) attaches to a remote driver

MPC = Multi-port connector attaches to any of BlackJack's Multi-Port canopies (canopy and driver sold separately)
Cable with modular connector attaches to a driver inside a Multi-Port canopy (driver may be remote)

JTA = Adapter connects the pendant in any position along the JackTrack system (track and driver sold separately)
Cable is cut to length and inserted in a connector at the bottom of the JackTrack adapter

SP5
5" Canopy
(integrated driver)

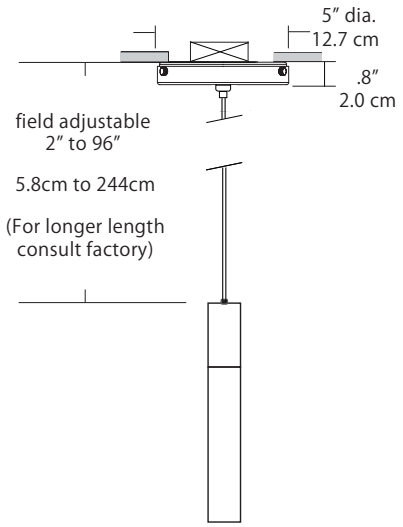

SP2
2.5" Fascia Canopy
(driver sold separately)

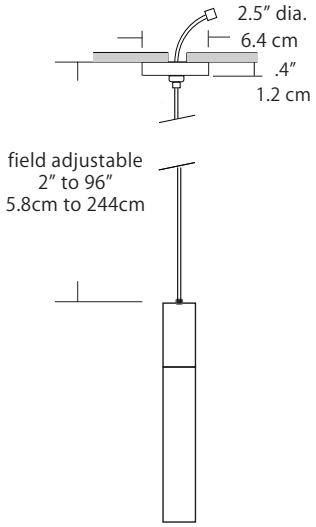

MPC
Multi-Port Connector
(canopy and driver sold separately)

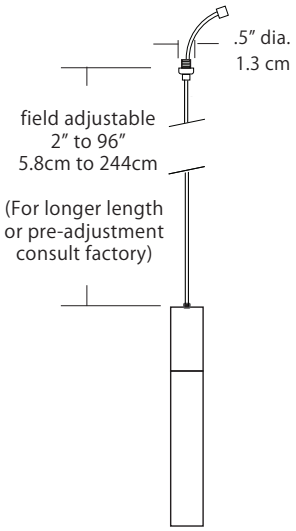

JTA
JackTrack Adapter
(track and driver sold separately)

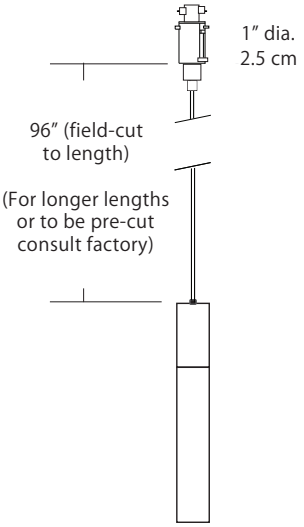

Max Cable Length

Length

BLANK
###

BLANK = Leave blank for standard 96" cable length.

= Specify maximum cable length needed for fixture (in inches).

Factory pre-configuration of cable length is available. Consult factory for details.

We reserve the right to change,
modify or upgrade our products without notice.
© 2022 Blackjack Lighting LLC

tel: **(847) 941-0588**
fax: **(847) 306-3432**
email: **sales@blackjacklighting.com**

Blackjacklighting.com
1547 Barclay Blvd.
Buffalo Grove IL, 60089

CANOPY / TRACK OPTIONS

For full specifications and ordering information see blackjacklighting.com

(# symbol indicates additional specification required)

Pendant Mounting	Canopy	Dimensions	End / Side View	Finish Options
SP5	**5″ Canopy** Canopy and driver included with pendant	5″ dia. 12.7 cm	.8″ 2 cm (Integrated Driver)	**BL** Matte Black **PC** Pol. Chrome **WH** White **SG** Satin Gold **BZ** Bronze **SS** Satin Silver
SP2	**2.5″ Fascia Canopy** Canopy included with pendant. Driver sold separately.	2.5″ dia. 6.4 cm	.4″ 1.3 cm (Remote Driver)	
MPC	**24″ Multi-Port Square - 9 Port** C-MPS-2409-# **24″ Multi-Port Square - 25 Port** C-MPS-2425-#	8″ OC 20.3 cm 23.9″ 60.7 cm 9 Port 4.8″ OC 12.2 cm 23.9″ 60.7 cm 25 Port	21.5″ 54.6 cm 2.5″ 6 cm (Integrated or Remote Driver)	**BL** Matte Black **PC** Pol. Chrome **WH** White **SG** Satin Gold **BZ** Bronze **SS** Satin Silver
MPC	**38″ Multi-Port Rectangle - 10 Port** C-MPT-3810-# **38″ Multi-Port Rectangle - 18 Port** C-MPT-3818-#	7.5″ OC 19 cm 3″ OC 7.6 cm 10 Port 37.7″ 97.8 cm 4.1″ OC 10.4 cm 2.5″ OC 6.4 cm 18 Port 37.7″ 97.8 cm	4.7″ 11.9 cm 2.5″ 6 cm 6″ 15.2 cm (Integrated Driver)	**BL** Matte Black **PC** Pol. Chrome **WH** White **SG** Satin Gold **BZ** Bronze **SS** Satin Silver
MPC	**22″ Multi-Port Linear - 5 Port** C-MPL-2205-# **48″ Multi-Port Linear - 11 Port** C-MPL-4811-#	4.4″ OC 11.2 cm 2.8″ 7 cm 5 Port 21.8″ 56 cm 4.4″ OC 11.2 cm 2.8″ 7 cm 11 Port 48″ 123 cm	2.8″ 7 cm 1.4″ 4 cm (Integrated or Remote Driver)	**BL** Matte Black **PC** Pol. Chrome **WH** White **SG** Satin Gold **BZ** Bronze **SS** Satin Silver
MPC	**10″ Round - 3 Port** C-MPR-1003-# **10″ Round - 9 Port** C-MPR-1009-#	11″ dia. 27.9 cm 7.4″ OC 18.8 cm 3 Port 11″ dia. 27.9 cm 2.9″ OC 7.4 cm 9 Port	10″ dia. 25.4 2.1″ 5.3 cm (Integrated Driver)	**BL** Matte Black **PC** Pol. Chrome **WH** White **SG** Satin Gold **BZ** Bronze **SS** Satin Silver
MPC	**20″ Round - 3 Port** C-MPR-2003-# **20″ Round - 12 Port** C-MPR-2012-#	20″ dia. 50.8 cm 14.5″ OC 36.8 cm 3 Port 20″ dia. 50.8 cm 6.4″ OC 16.3 cm 12 Port	18″ dia. 45.7 cm 2.5″ 6 cm (Integrated Driver)	**BL** Matte Black **PC** Pol. Chrome **WH** White **SG** Satin Gold **BZ** Bronze **SS** Satin Silver
JTA	**24″ JackTrack** #-#-# **48″ JackTrack** #-#-# **94″ JackTrack** #-#-#	1.75″ 4.5 cm 23″ 58.4 cm 1.75″ 4.5 cm 47″ 119.4 cm 1.75″ 4.5 cm 94″ 238.8 cm	1.38″ 3.5 cm 1.75″ 4.5 cm (Remote Driver)	**BL** Matte Black **WH** White

© 2022 Blackjack Lighting LLC

tel: **(847) 941-0588**
fax: **(847) 306-3432**
email: **sales@blackjacklighting.com**

Blackjacklighting.com
1547 Barclay Blvd.
Buffalo Grove IL, 60089

MODULAR SYSTEM OPTIONS

For more information see www.Blackjacklighting.com

(# symbol indicates additional specification required)

System	Pendant Mounting	Configuration Examples	Finish Options

Quatro

Square Configurations - See Quatro Square Configurations section of our website for specification information (#)

4S (4′ 2x2 / 9 Port)
MSQ-2409-#-#-4S-#-#

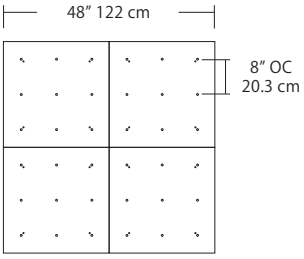

6S (6′ 3x3 / 25 Port)
MSQ-2425-#-#-6S-#-#

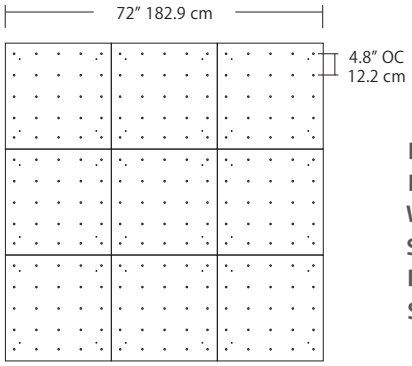

MPC

BL Matte Black
PC Pol. Chrome
WH White
SG Satin Gold
BZ Bronze
SS Satin Silver

Linear Configurations - See Quatro Linear Configurations section of our website for specification information (#)

4L (4′x2′ / 9 Port)
MSQ-2409-#-#-4L-#-#

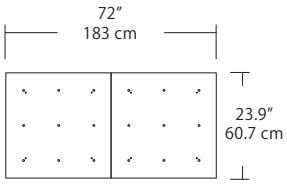

6L (6′x2′ / 25 Port)
MSQ-2425-#-#-6L-#-#

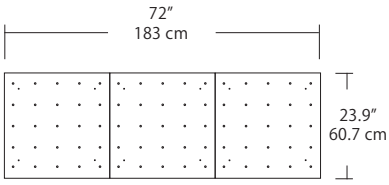

Duo

Linear Configurations - See Duo Linear Configurations section of our website for specification information (#)

6L (6′4″x6″ / 10 Port)
MSD-3810-#-#-6L-#-#

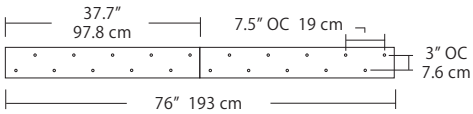

MPC

9L (9′6″x6″/ 18 Port)
MSD-3818-#-#-9L-#-#

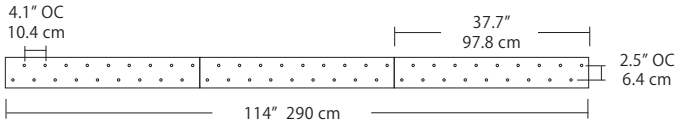

BL Matte Black
PC Pol. Chrome
WH White
SG Satin Gold
BZ Bronze
SS Satin Silver

Solo

Solo 48″ Linear Configuration - See Solo Linear Configuration section of our website for specific information (#)

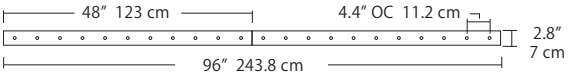

Solo (L) Configuration

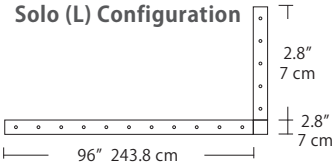

Solo 22″ Grid Configuration - See Solo Grid Configuration section of our website for specific information (#)

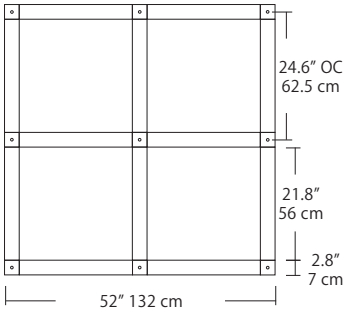

Solo 48″ Grid Configuration

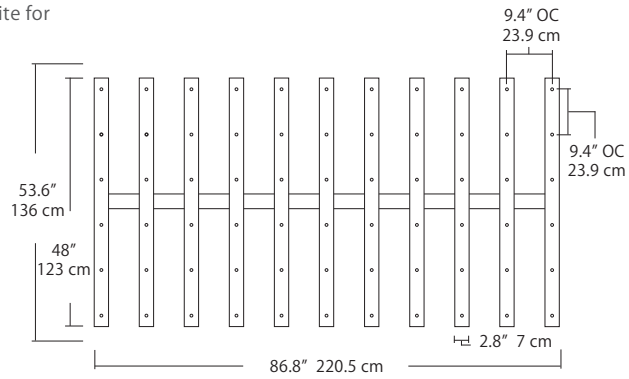

MPC

BL Matte Black
PC Pol. Chrome
WH White
SG Satin Gold
BZ Bronze
SS Satin Silver

© 2022 Blackjack Lighting LLC

tel: **(847) 941-0588**
fax: **(847) 306-3432**
email: **sales@blackjacklighting.com**

Blackjacklighting.com
1547 Barclay Blvd.
Buffalo Grove IL, 60089